REVISIONS		
ISS	ZONE	DESCRIPTION\PER REQUEST\DATE

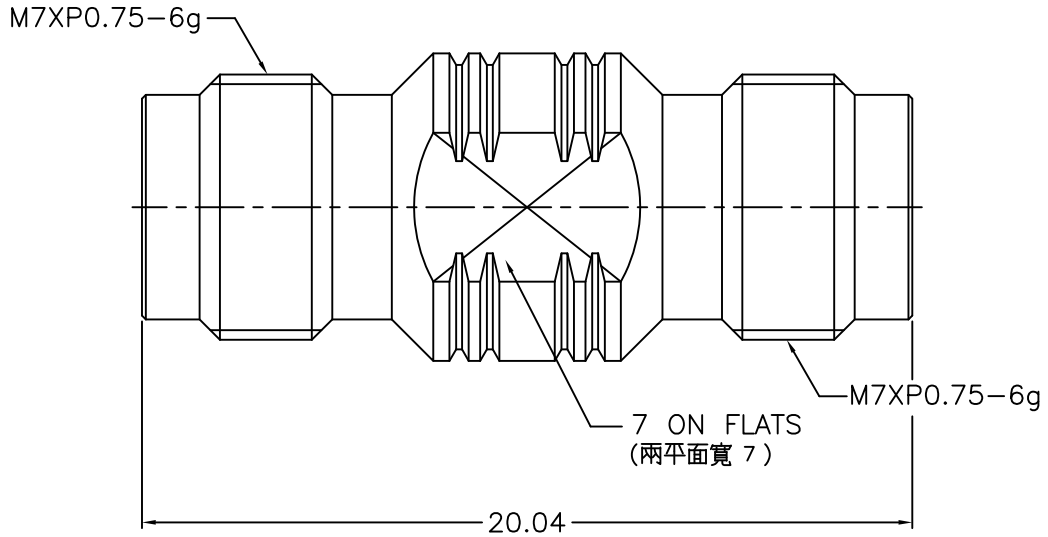

NOTES: FINISH (PLATING THICKNESS IN MICRO–INCHES)
1. BERYLLIUM COPPER
2. STAINLESS STEEL
3. PASSIVATED
4. NICKEL PL. 100 MIN. THICK OVER COPPER PL. 50 MIN. THICK
5. GOLD PL. 10 MIN. THICK OVER ELECTROLESS NICKEL PL. 100 MIN. THICK
6. ULTEM 1000
7. BRASS

RoHS COMPLIANT

NO.	DESCRIPTION	MATERIAL	FINISH	Q'TY	DRAWING NO.
4	BODY	NOTE 2	NOTE 3		
3	RING	NOTE 7	NOTE 4		
2	INSULATOR	NOTE 6	NATURAL		
1	CONTACT PIN	NOTE 1	NOTE 5		

DIMENSIONS ARE IN MILLIMETERS

UNLESS OTHERWISE SPECIFIED TOLERANCES
0.5–6 = ±0.2
6–30 = ±0.4
30–120 = ±0.6
120–315 = ±1
315–1000 = ±1.6
1000–2000 = ±2.4

SCALE 5/1 ISSUE 2

PART NO.

APPROVED DATE 03–08–'21

CHECKED DATE 03–08–'21

DRAWN ALAN DATE 03–08–'21

G.L.I.

TITLE 1.85mm JACK TO JACK ADAPTOR

DRAWING NO. 185–7071S1–50

FILE NO. R:\D\DWG\185\7071S1\50–2